LiGHT SKY



# SUPER SCOPE COLOR

## LED MOVING BSWP 4 IN 1

## FEATURES

- It is a moving head light that integrates beam, wash, spot, and profile.
- The optical system design utilizes high-precision optical components, with a beam aperture of 180mm, providing long projection distance and high illuminance.
- The heat dissipation system features a low-noise design and optional ultra-silent operation mode.
- The rotation gobo wheel includes 2 rotating gobo wheels, offering a variety of gobos with high clarity and color consistency from center to edge.
- The framing system rotates up to ±55°, ensuring clear and undistorted edges.
- The total light output can reach up to 17600 lm.
- Suitable for high-end performance venues such as theaters, television studios, large concerts, and sports arenas.

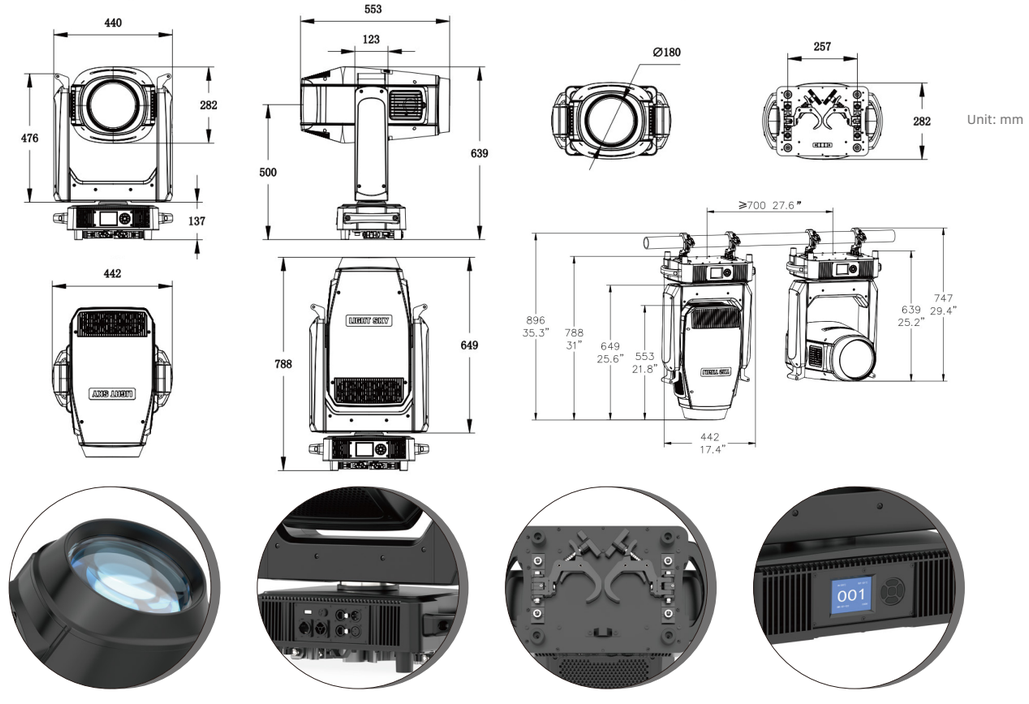


Unit: mm

### Light source & Optics

- Light Source: 600W Five-Color LED Module (RGBAL)
- Zoom Angle: 5.9°- 52°
- Front Lens : Coated with High Transmission Anti-Reflection Film, ϕ180 mm
- Colour Temperature Output: 2700-8000 K
- Color Rendering Index (CRI): Ra Up to 95
- Illuminance: 12,500 lx@10m
- Lumen Output: 17,600 lm
- Light Source Theory Life Span: 50,000 h
- LiGHTSKY Colorfy Calibration

### Colors

- 165 electronic color chips, rich in color
- Virtual CMY
- Virtual CTO

### Gobos

- 2 Rotating Gobo Wheels, each with 14 Glass Gobos, allowing dynamic overlay effects, interchangeable and capable of rotation, flowing, and shaking effects.
- Rotation Gobo Wheel A: 7 glass gobos + blank; gobo size: Ø26.9 mm (outer), Ø21.5 mm (inner)
- Rotation Gobo Wheel B: 7 glass gobos + blank; gobo size: Ø26.9 mm (outer), Ø21.5 mm (inner)
- Animation wheel
- Framing system: 4 blade plates enable quick and smooth cutting, with eight independent control directions and angles, each plate capable of complete blackout, and the entire cutting module can rotate ±55°

### Effects

- 8-facet Prism
- light frost and Heavy frost ,independently switchable, stackable
- Motorized Iris, 5-100% linear adjustment, with macro function for multiple effect changes.
- Electronic Dimmer, 0-100% linear dimming, uniform light spot.
- Electronic Strobe Speed: 1-25 times per second.
- LED Refresh Rate: 1000Hz ~ 25KHz.

### Control and Programming

- Control Channels: 60CH, 35CH, 64CH, 49CH (see channel chart for details)
- Protocols: DMX512, RDM, Art-Net,sACN
- Data connection: Locking 3 pin or 5 pin XLR IN/OUT
- Display: LCD screen

### Software

- Software upgrades via DMX signal or USB interface
- Silent fan with three working modes (high brightness / silent / ultra-silent)
- Intelligent temperature control to ensure LED lifespan

### Pan/Tilt Movement

- Pan: 540°, 8-bit / 16-bit precision
- Tilt: 270° , 8-bit / 16-bit precision
- Automatic reset with error correction
- Tilt Lock

### Power and Electrical

- Input Voltage Range: AC 100-240V 50/60Hz
- Max Power Consumption: 1050W (100V input)
- Power factor: 0.996
- Maximum current: 10.5A (100V input)

### Size and Weight

- Product Dimensions: 442mm × 282mm × 788mm
- Net Weight: 37.5kg
- Carton Dimensions: 660mm × 560mm × 740mm
- Gross Weight: 46.6kg

### Other

- IP Rate: IP20
- Operating environment: -10℃ ~ 45℃
- Maximum surface temperature of the lamp body: 75℃

### Factory Configuration

- Power Cable: 1 pc (Part No.: F0200030016)
- Signal Cable: 1 pc (Part No.: C1400060031)
- Safety Rope: 2 pcs (Part No.: F0200010002)
- Clamp: 2 pcs Compatible with tubes of Ø50-60 mm (Part No.: C0499990032)

### Optional Accessories/Packaging

- Flycase Part No.: B0100950001
- Flycase Dimensions: 700mm × 700mm × 880mm
- Flycase Gross Weight: 75.1kg

## Illumination Diagram

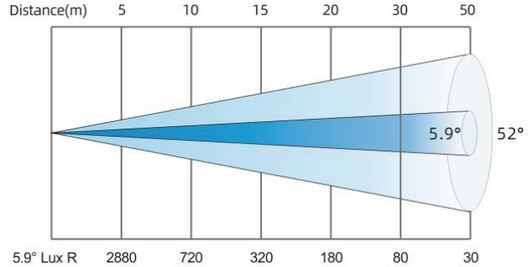


| Distance(m) | 5 | 10 | 15 | 20 | 30 | 50 |
|---|---|---|---|---|---|---|
| 5.9° Lux R | 2880 | 720 | 320 | 180 | 80 | 30 |
| G | 8400 | 2100 | 930 | 520 | 230 | 85 |
| B | 1720 | 430 | 190 | 110 | 50 | 20 |
| A | 6320 | 1580 | 700 | 400 | 180 | 60 |
| L | 34400 | 8600 | 3800 | 2150 | 950 | 340 |
| RGBAL | 50000 | 12500 | 5556 | 3125 | 1389 | 500 |
| Diameter (m) | 0.53 | 1.07 | 1.6 | 2.14 | 3.21 | 5.35 |
| 52° Lux R | 80 | 20 | 9 | 5 | 2 | 1 |
| G | 200 | 50 | 22 | 13 | 6 | 2 |
| B | 40 | 10 | 4 | 3 | 1 | 0 |
| A | 144 | 36 | 16 | 9 | 4 | 1 |
| L | 800 | 200 | 89 | 50 | 22 | 8 |
| RGBAL | 1200 | 300 | 130 | 75 | 30 | 12 |
| Diameter (m) | 4.91 | 9.82 | 14.73 | 19.64 | 29.46 | 49.1 |

## Function Effect

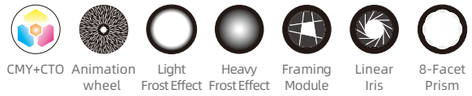


## Rotation Gobo Wheel A

7+1, Outer diameter ϕ26.9mm, Inner diameter ϕ21.5mm



## Rotation Gobo Wheel B

7+1, Outer diameter ϕ26.9mm, Inner diameter ϕ21.5mm

